Electrolux PROFESSIONAL

Modular Cooking Range Line 900XP 4 Electric Infrared Cooking Top

ITEM #

MODEL #

NAME #

SIS #

AIA #

391045 (E9IREH4000)	4-zone (3,4 kW each) electric Infrared Cooking Top
391170 (E9IREH400N)	4-zone (3,4 kW each) electric infrared cooking top

Short Form Specification

Item No.

Glass ceramic cooking surface 6 mm thick, with 4 concentric circular heating zones. Infrared top surface with seamless transition between individual heating zones. Body and work top of unit entirely in stainless steel with Scotch Brite finish. Extra strength work top in heavy duty 2 mm stainless steel. Right-angled side edges to allow flush-fitting junction between units.

APPROVAL:

Main Features

- Ceramic glass top cooking surface with 4 infrared heating zones 6 mm thick.
- The circular concentric heating sections measuring from 180 to 300 mm give uniform heat also to the largest pan.
- The cooking top is sealed to prevent infiltration inside the unit.
- Warning light to indicate residual surface heat.
- Immediate heat transfer from cooking top to pan.
- Low heat dissipation to the kitchen.
- The smooth glass-ceramic surface can be quickly and easily cleaned, thus providing maximum hygiene.
- IPX5 water protection.
- Suitable for countertop installation.

Construction

- Unit is 930 mm deep to give a larger working surface area.
- All exterior panels in Stainless Steel with Scotch Brite finishing.
- AISI 304 stainless steel worktop, 2mm thick.
- Model has right-angled side edges to allow flush fitting joints between units, eliminating gaps and possible dirt traps.

Sustainability

- Energy regulation of each zone.

Optional Accessories

• Kit for 23-litre fryer, drain extension in high resistant elastometer with stainless steel extremites to drain oil - 900XP (only for 391045)	PNC 200087	❑
• Junction sealing kit	PNC 206086	❑
• Support for bridge type installation, 800mm	PNC 206137	❑
• Support for bridge type installation, 1000mm	PNC 206138	❑
• Support for bridge type installation, 1200mm	PNC 206139	❑
• Support for bridge type installation, 1400mm	PNC 206140	❑
• Support for bridge type installation, 1600mm	PNC 206141	❑
• Water column with swivel arm (water column extension not included)	PNC 206289	❑
• Water column extension for 900 line (only for 391045)	PNC 206290	❑
• Chimney upstand, 800mm	PNC 206304	❑
• Back handrail 800 mm	PNC 206308	❑
• Back handrail 1200 mm	PNC 206309	❑
• Side handrail-right/left hand (900XP)	PNC 216044	❑
• Frontal handrail, 800mm	PNC 216047	❑
• Frontal handrail, 1200mm	PNC 216049	❑
• Frontal handrail, 1600mm	PNC 216050	❑
• Large handrail - portioning shelf, 800mm	PNC 216186	❑
• 2 side covering panels for top appliances	PNC 216278	❑

The company reserves the right to make modifications to the products without prior notice. All information correct at time of printing.

Modular Cooking Range Line 900XP 4 Electric Infrared Cooking Top

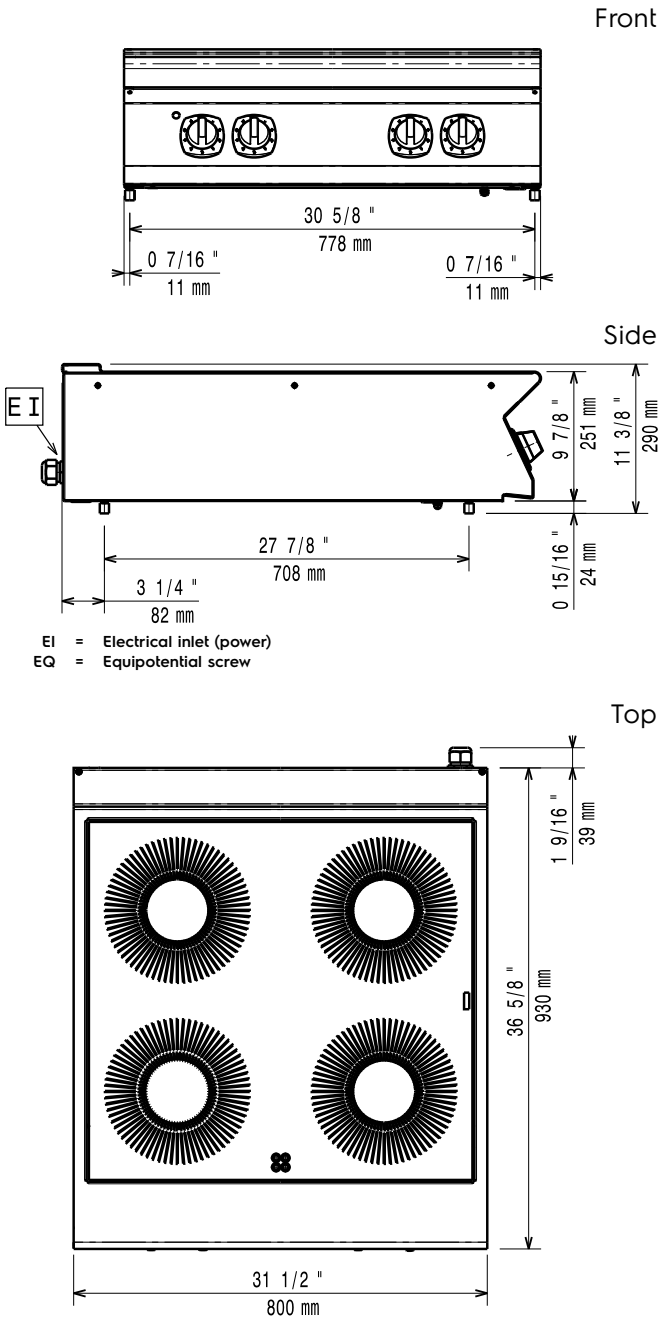

Electric

Supply voltage:	
391045 (E9IREH4000)	380-400 V/3N ph/50/60 Hz
391170 (E9IREH400N)	230 V/3 ph/50/60 Hz
Total Watts:	13.6 kW
Predisposed for:	
391045 (E9IREH4000)	380-400V 3N~ 50/60Hz 12-13,6kW

Key Information:

Front Plates Power:	3.4 - 3.4 kW
Back Plates Power:	3.4 - 3.4 kW
Front Plates dimensions:	Ø 300 Ø 300
Back Plates dimensions:	Ø 300 Ø 300
External dimensions, Width:	800 mm
External dimensions, Depth:	930 mm
External dimensions, Height:	250 mm
Net weight:	69 kg
Shipping weight:	
391045 (E9IREH4000)	54 kg
391170 (E9IREH400N)	89 kg
Shipping height:	
391045 (E9IREH4000)	530 mm
391170 (E9IREH400N)	540 mm
Shipping width:	
391045 (E9IREH4000)	1010 mm
391170 (E9IREH400N)	1020 mm
Shipping depth:	
391045 (E9IREH4000)	860 mm
391170 (E9IREH400N)	900 mm
Shipping volume:	
391045 (E9IREH4000)	0.46 m³
391170 (E9IREH400N)	0.5 m³
Certification group:	
391045 (E9IREH4000)	N9CIE
391170 (E9IREH400N)	NIR98

If appliance is set up or next to or against temperature sensitive furniture or similar, a safety gap of approximately 150 mm should be maintained or some form of heat insulation fitted.

The company reserves the right to make modifications to the products without prior notice. All information correct at time of printing.

2024.10.10